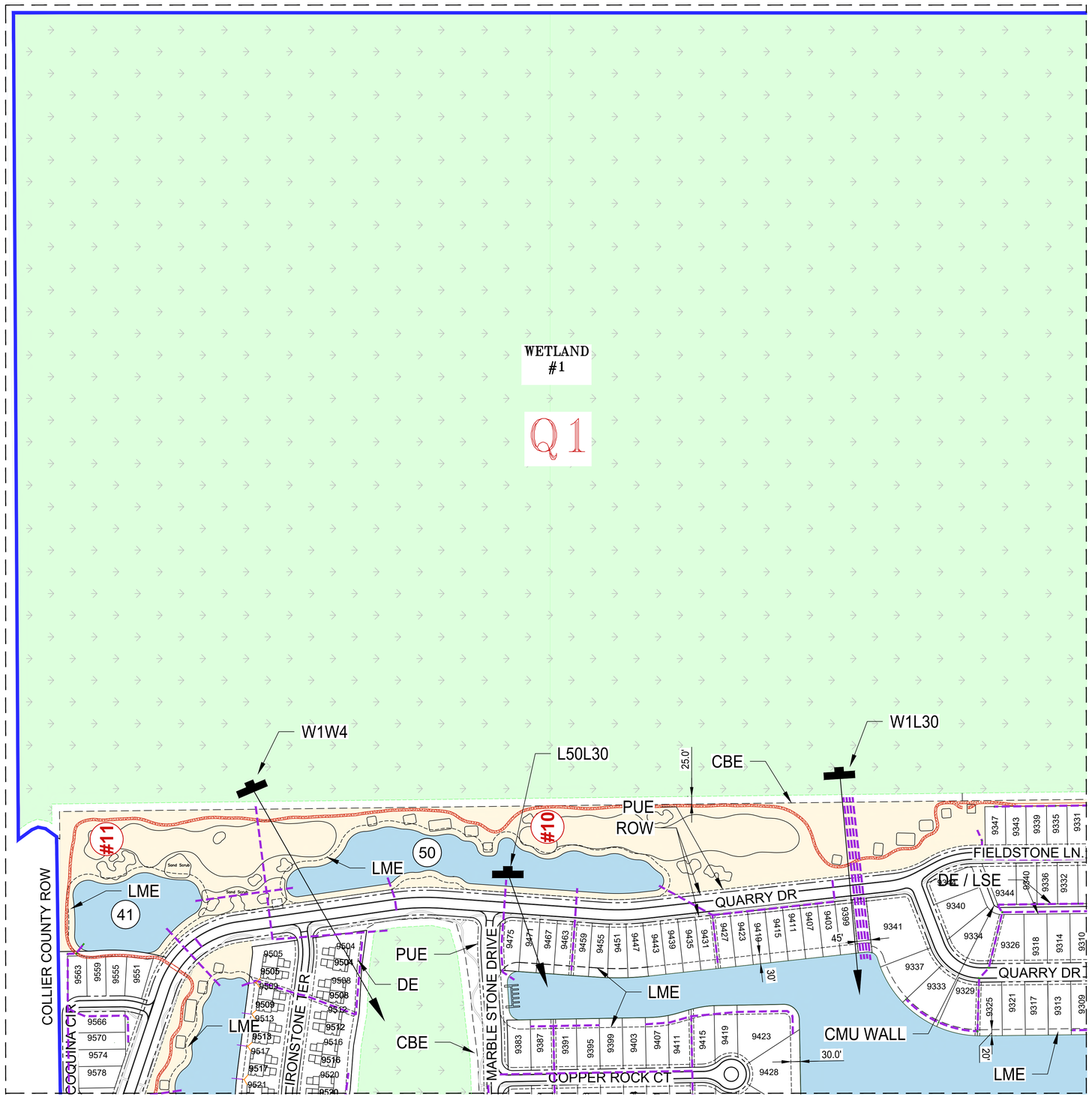

LEGEND

- QCA
- QUARRY GOLF CLUB
- QCDD PRESERVE
- QCDD LAKES
- HERITAGE BAY
- OTHERS
- CART PATH
- STORM STRUCTURE
- THE QUARRY LIMITS
- STORMWATER PIPES
- QCCD DOWN-SPOUT CONNECTION PIPE
- QCA DOWN-SPOUT CONNECTION PIPE
- WETLAND / PRESERVE LIMITS
- SEAWALL
- (##) LAKE NUMBER
- (#1) GOLF COURSE HOLE NUMBER
- (LME) LAKE MAINTENANCE EASEMENT
- (CBE) CONSERVATION BUFFER EASEMENT
- (PUE) PUBLIC UTILITY EASEMENT
- (DE) DRAINAGE EASEMENT
- (LSE) LANDSCAPE MAINTENANCE EASEMENT

N

CDD

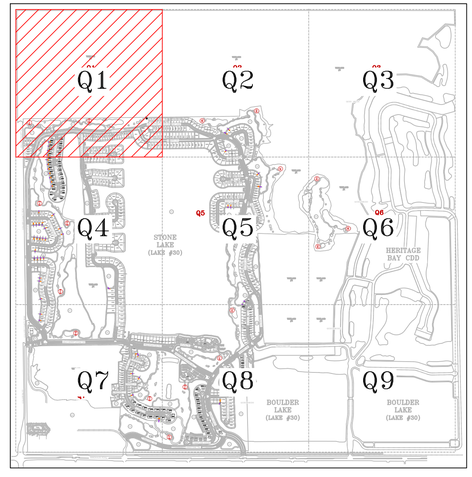

KEY MAP

REVISED OCTOBER 2023

cph
www.cphcorp.com
A Full Service A & E Firm
500 West Fulton Street
Sanford, FL 32771
Ph: 407.322.6841
Plans Prepared By:
CPH, Inc.
State of Florida Licenses:
Engineer No. 3215
Surveyor No. LB7143
Architect. No. AA26000926
Landscape No. LC000298

No.	Date	Revision

Designed: A. LOPEZ
Drawn: A.LOPEZ
Checked: J. SATFIELD
Job No.: Q0501
Date: 12/02/21 © 2023

THE QUARRY JURISDICTION MAP

THE QUARRY CDD

NAPLES / COLLIER COUNTY / FLORIDA

THIS SHEET NOT VALID FOR CONSTRUCTION WITHOUT COMPLETE SET OF PLANS. SEE GENERAL NOTES FOR MASTER LEGEND.

Sheet No.
Q1

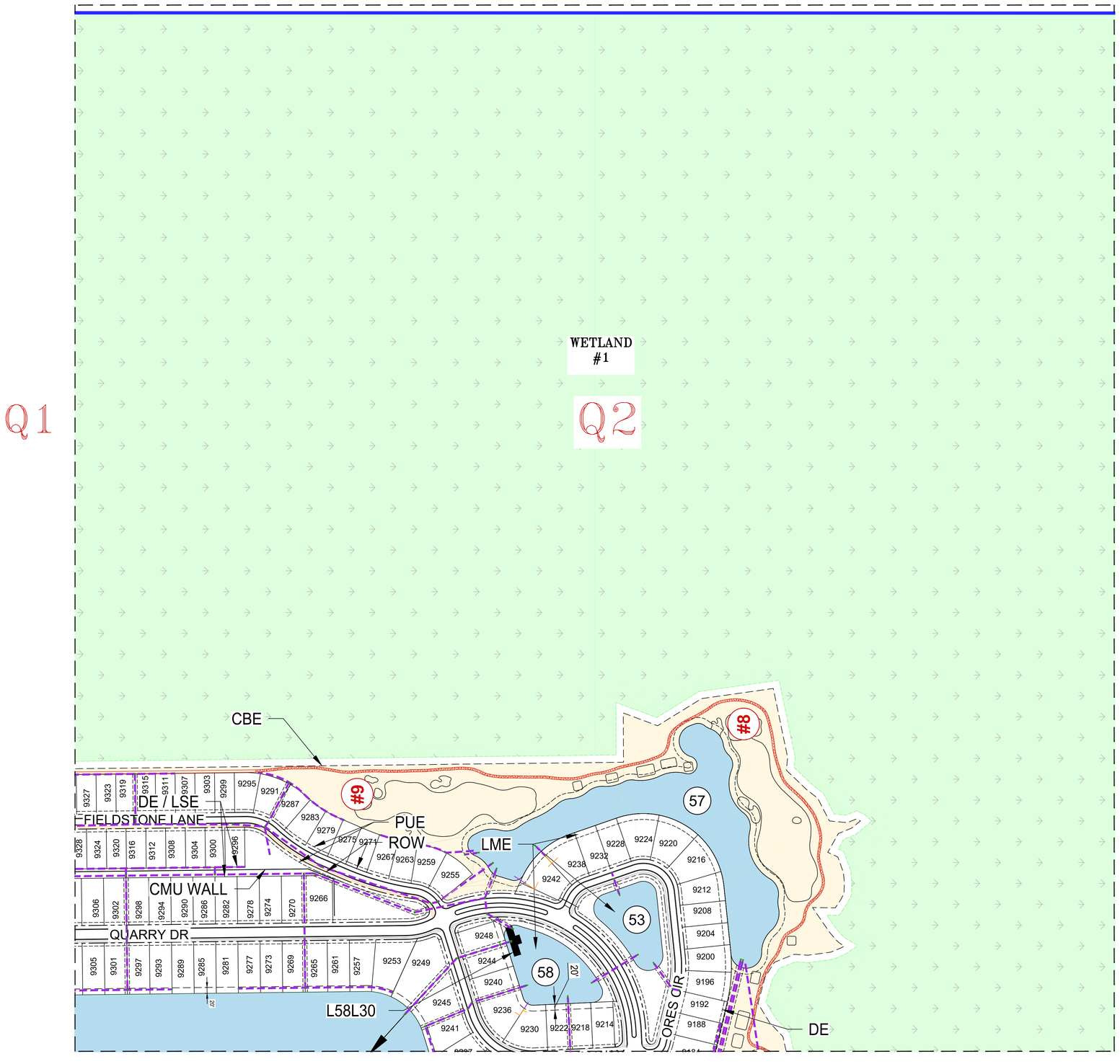

LEGEND

- QCA
- QUARRY GOLF CLUB
- QCDD PRESERVE
- QCDD LAKES
- HERITAGE BAY
- OTHERS
- CART PATH
- STORM STRUCTURE
- THE QUARRY LIMITS
- STORMWATER PIPES
- QCCD DOWN-SPOUT CONNECTION PIPE
- QCA DOWN-SPOUT CONNECTION PIPE
- WETLAND / PRESERVE LIMITS
- SEAWALL
- (##) LAKE NUMBER
- (#1) GOLF COURSE HOLE NUMBER
- (LME) LAKE MAINTENANCE EASEMENT
- (CBE) CONSERVATION BUFFER EASEMENT
- (PUE) PUBLIC UTILITY EASEMENT
- (DE) DRAINAGE EASEMENT
- (LSE) LANDSCAPE MAINTENANCE EASEMENT

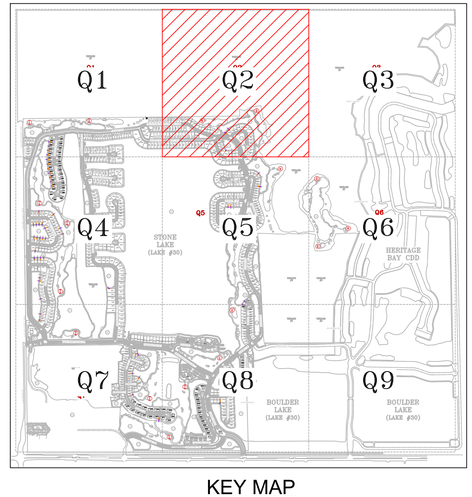

KEY MAP

REVISED OCTOBER 2023

cph
www.cphcorp.com
A Full Service A & E Firm
500 West Fulton Street
Sanford, FL 32771
Ph: 407.322.6841
Plans Prepared By:
CPH, Inc.
State of Florida Licenses:
Engineer No. 3215
Surveyor No. LB7143
Architect. No. AA26000926
Landscape No. LC000298

No.	Date	Revision

Designed: A. LOPEZ
Drawn: A.LOPEZ
Checked: J. SATFIELD
Job No.: Q0501
Date: 12/02/21 © 2023

THE QUARRY JURISDICTION MAP

THE QUARRY CDD

NAPLES / COLLIER COUNTY / FLORIDA

THIS SHEET NOT VALID FOR CONSTRUCTION WITHOUT COMPLETE SET OF PLANS. SEE GENERAL NOTES FOR MASTER LEGEND.

Sheet No.
Q2

\\cph\pz\Jobs\Q0504\Civil\DWG\Report_Figures_and_Exhibits\TQCDD – Jurisdiction Exhibit\B.30.2023\TQCDD – Jurisdiction Exhibit_Revised 2023 08.dwg, 10/30/2023 4:25:47 PM, Messonnier, Corey, _cph – Civil And Landscape.stb

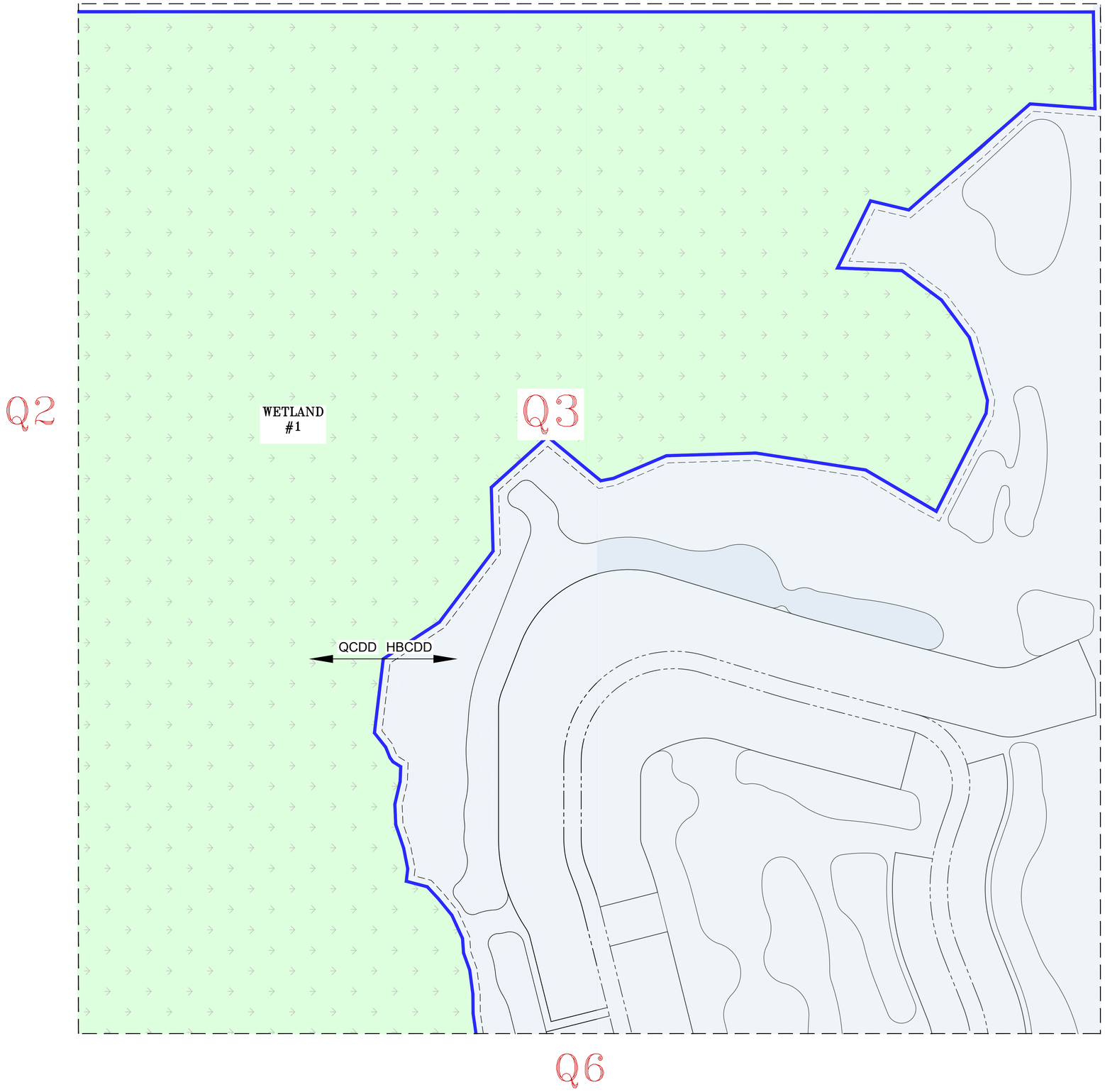

LEGEND

- QCA
- QUARRY GOLF CLUB
- QCDD PRESERVE
- QCDD LAKES
- HERITAGE BAY
- OTHERS
- CART PATH
- STORM STRUCTURE
- THE QUARRY LIMITS
- STORMWATER PIPES
- QCCD DOWN-SPOUT CONNECTION PIPE
- QCA DOWN-SPOUT CONNECTION PIPE
- WETLAND / PRESERVE LIMITS
- SEAWALL
- ## LAKE NUMBER
- #1 GOLF COURSE HOLE NUMBER
- (LME) LAKE MAINTENANCE EASEMENT
- (CBE) CONSERVATION BUFFER EASEMENT
- (PUE) PUBLIC UTILITY EASEMENT
- (DE) DRAINAGE EASEMENT
- (LSE) LANDSCAPE MAINTENANCE EASEMENT

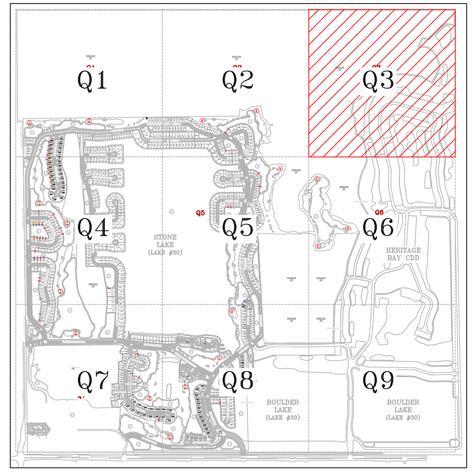

KEY MAP

REVISED OCTOBER 2023

cph
www.cphcorp.com
A Full Service A & E Firm
500 West Fulton Street
Sanford, FL 32771
Ph: 407.322.6841
Plans Prepared By:
CPH ,Inc.
State of Florida Licenses:
Engineer No. 3215
Surveyor No. LB7143
Architect. No. AA26000926
Landscape No. LC000298

No.	Date	Revision
1		
2		
3		
4		
5		
6		
7		

Designed: A. LOPEZ
Drawn: A.LOPEZ
Checked: J. SATFIELD
Job No.: Q0501
Date: 12/02/21

© 2023

THE QUARRY JURISDICTION MAP

THE QUARRY CDD

NAPLES / COLLIER COUNTY / FLORIDA

THIS SHEET NOT VALID FOR CONSTRUCTION WITHOUT COMPLETE SET OF PLANS. SEE GENERAL NOTES FOR MASTER LEGEND.

Sheet No.
Q3

\\cph\pz\Jobs\Q0504\Civil\DWG\Report_Figures_and_Exhibits\TQCDD - Jurisdiction Exhibit\8.30.2023\TQCDD - Jurisdiction Exhibit_Revised 2023 08.dwg, 10/30/2023 4:26:03 PM, Messonnier, Corey, _cph - Civil And Landscape.stb

Q1

Q4

Q5

Q7

STONE LAKE
(LAKE #30)

WETLAND
#4

COPPER CANYON CT

SLATE CT

GRANITE CT

IRONSTONE TER

COBALT COVE CIR

NICKEL RIDGE CIR

MARBLE STONE DRIVE

QUARRY DRIVE

COLLIER COUNTY ROW

UTURE COLLIER BLVD
XTENSION
RAINAGE STUBOUT
TYP)

PUE

ROW

CBE

L54L30-1

L54L30-2

L55L30

LME

30'

20'

42 45 44 46 48 54 55

#12 #13 #14

LEGEND

- QCA
- QUARRY GOLF CLUB
- QCDD PRESERVE
- QCDD LAKES
- HERITAGE BAY
- OTHERS
- CART PATH
- STORM STRUCTURE
- THE QUARRY LIMITS
- STORMWATER PIPES
- QCCD DOWN-SPOUT CONNECTION PIPE
- QCA DOWN-SPOUT CONNECTION PIPE
- WETLAND / PRESERVE LIMITS
- SEAWALL
- (##) LAKE NUMBER
- (#1) GOLF COURSE HOLE NUMBER
- (LME) LAKE MAINTENANCE EASEMENT
- (CBE) CONSERVATION BUFFER EASEMENT
- (PUE) PUBLIC UTILITY EASEMENT
- (DE) DRAINAGE EASEMENT
- (LSE) LANDSCAPE MAINTENANCE EASEMENT

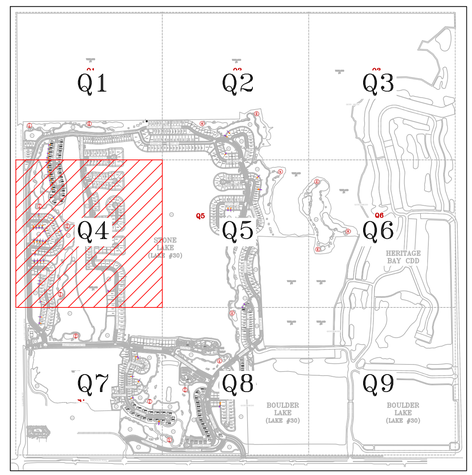

KEY MAP

N

cph
www.cphcorp.com
A Full Service A & E Firm
500 West Fulton Street
Sanford, FL 32771
Ph: 407.322.6841

Plans Prepared By:
CPH, Inc.
State of Florida Licenses:
Engineer No. 3215
Surveyor No. LB7143
Architect. No. AA26000926
Landscape No. LC000298

No.	Date	Revision

Designed: A. LOPEZ
Drawn: A.LOPEZ
Checked: J. SATFIELD
Job No.: Q0501
Date: 12/02/21
© 2023

THE QUARRY JURISDICTION MAP

THE QUARRY CDD
NAPLES / COLLIER COUNTY / FLORIDA

THIS SHEET NOT VALID FOR CONSTRUCTION WITHOUT COMPLETE SET OF PLANS. SEE GENERAL NOTES FOR MASTER LEGEND.

Sheet No.
Q4

REVISED OCTOBER 2023

\\cph\pz\Jobs\Q0504\Civil\DWG\Report_Figures_and_Exhibits\TQCDD - Jurisdiction Exhibit\8.30.2023\TQCDD - Jurisdiction Exhibit_Revised 2023 08.dwg, 10/30/2023 4:26:13 PM, Messonnier, Corey, _cph - Civil And Landscape.stb

Q2

Q4

Q5

Q6

Q8

GYPSUM WAY

FLINT CT

GRAPHITE CIR

LIMESTONE LN

QUARRY DR

STONE LAKE
(LAKE #30)

WETLAND
#1

WETLAND
#2

L59L30

L59L30-2

L62L30

L63L30-1

L63L30-2

LME

PUE

ROW

CBE

DE

W1W2

59

61

62

63

63A

30

#3

#7

20'

LEGEND

- QCA
- QUARRY GOLF CLUB
- QCDD PRESERVE
- QCDD LAKES
- HERITAGE BAY
- OTHERS
- CART PATH
- STORM STRUCTURE
- THE QUARRY LIMITS
- STORMWATER PIPES
- QCCD DOWN-SPOUT CONNECTION PIPE
- QCA DOWN-SPOUT CONNECTION PIPE
- WETLAND / PRESERVE LIMITS
- SEAWALL
- (##) LAKE NUMBER
- (#1) GOLF COURSE HOLE NUMBER
- (LME) LAKE MAINTENANCE EASEMENT
- (CBE) CONSERVATION BUFFER EASEMENT
- (PUE) PUBLIC UTILITY EASEMENT
- (DE) DRAINAGE EASEMENT
- (LSE) LANDSCAPE MAINTENANCE EASEMENT

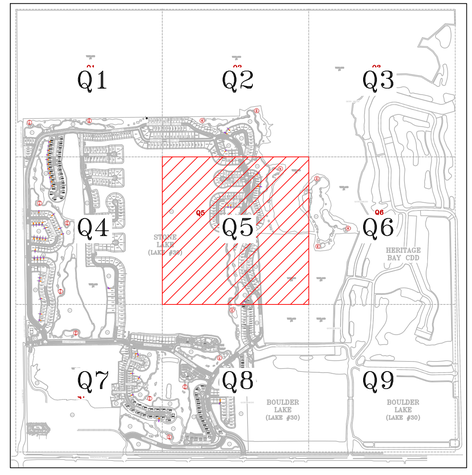

KEY MAP

REVISED OCTOBER 2023

cph
www.cphcorp.com
A Full Service A & E Firm
500 West Fulton Street
Sanford, FL 32771
Ph: 407.322.6841
Plans Prepared By:
CPH, Inc.
State of Florida Licenses:
Engineer No. 3215
Surveyor No. LB7143
Architect. No. AA26000926
Landscape No. LC000298

No.	Revision	Date

Designed: A. LOPEZ
Drawn: A.LOPEZ
Checked: J. SATFIELD
Job No.: Q0501
Date: 12/02/21

© 2023

THE QUARRY JURISDICTION MAP

THE QUARRY CDD

NAPLES / COLLIER COUNTY / FLORIDA

THIS SHEET NOT VALID FOR CONSTRUCTION WITHOUT COMPLETE SET OF PLANS. SEE GENERAL NOTES FOR MASTER LEGEND.

Sheet No.
Q5

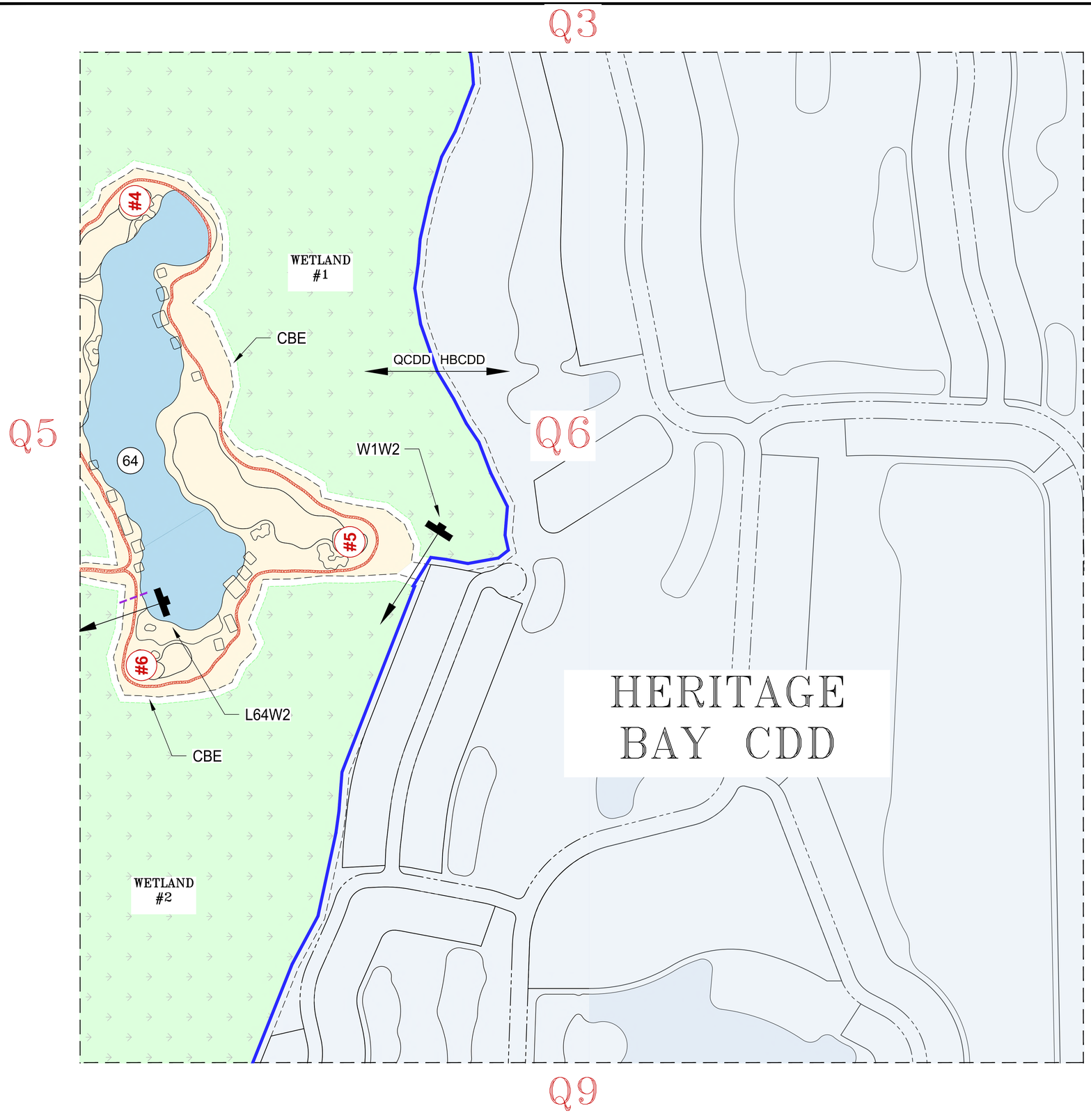

LEGEND

- QCA
- QUARRY GOLF CLUB
- QCDD PRESERVE
- QCDD LAKES
- HERITAGE BAY
- OTHERS
- CART PATH
- STORM STRUCTURE
- THE QUARRY LIMITS
- STORMWATER PIPES
- QCCD DOWN-SPOUT CONNECTION PIPE
- QCA DOWN-SPOUT CONNECTION PIPE
- WETLAND / PRESERVE LIMITS
- SEAWALL
- (##) LAKE NUMBER
- (#1) GOLF COURSE HOLE NUMBER
- (LME) LAKE MAINTENANCE EASEMENT
- (CBE) CONSERVATION BUFFER EASEMENT
- (PUE) PUBLIC UTILITY EASEMENT
- (DE) DRAINAGE EASEMENT
- (LSE) LANDSCAPE MAINTENANCE EASEMENT

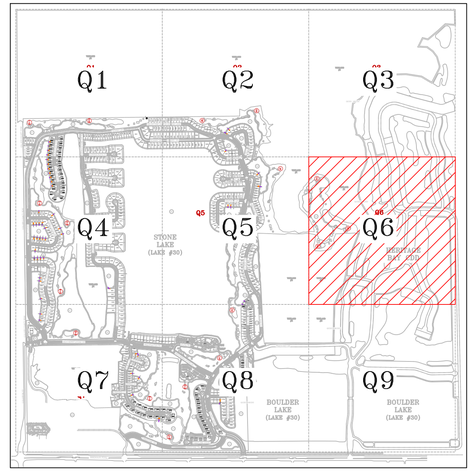

KEY MAP

REVISED OCTOBER 2023

cph
www.cphcorp.com
A Full Service A & E Firm
500 West Fulton Street
Sanford, FL 32771
Ph: 407.322.6841
Plans Prepared By:
CPH, Inc.
State of Florida Licenses:
Engineer No. 3215
Surveyor No. LB7143
Architect. No. AA26000926
Landscape No. LC000298

No.	Revision	Date

Designed: A. LOPEZ
Drawn: A.LOPEZ
Checked: J. SATFIELD
Job No.: Q0501
Date: 12/02/21 © 2023

THE QUARRY JURISDICTION MAP

THE QUARRY CDD

NAPLES / COLLIER COUNTY / FLORIDA

THIS SHEET NOT VALID FOR CONSTRUCTION WITHOUT COMPLETE SET OF PLANS. SEE GENERAL NOTES FOR MASTER LEGEND.

Sheet No.
Q6

Q4

STONE LAKE (LAKE #30)

COLLIER COUNTY ROW

COLLIER BLVD

IMMOKALEE ROAD

NICKEL RIDGE CIR

MARBLE STONE DRIVE

WEATHERED STONE DR

BREAKWATER DR

QUARTZ LN

CRYSTAL CT

SHALE CT

TREESIDE CT

LIMESTONE TRL

LME

CBE

W4W3

L56L30

MAINT. OF BEACHES BY QCA

WETLAND #3

L66COCO1 ULTIMATE OUTFALL (WEST)

Q7

Q8

J:\Q0501\Civil\Graphics_Images\[illegible]NC_20755

LEGEND

- QCA
- QUARRY GOLF CLUB
- QCDD PRESERVE
- QCDD LAKES
- HERITAGE BAY
- OTHERS
- CART PATH
- STORM STRUCTURE
- THE QUARRY LIMITS
- STORMWATER PIPES
- QCCD DOWN-SPOUT CONNECTION PIPE
- QCA DOWN-SPOUT CONNECTION PIPE
- WETLAND / PRESERVE LIMITS
- SEAWALL
- (##) LAKE NUMBER
- (#1) GOLF COURSE HOLE NUMBER
- (LME) LAKE MAINTENANCE EASEMENT
- (CBE) CONSERVATION BUFFER EASEMENT
- (PUE) PUBLIC UTILITY EASEMENT
- (DE) DRAINAGE EASEMENT
- (LSE) LANDSCAPE MAINTENANCE EASEMENT

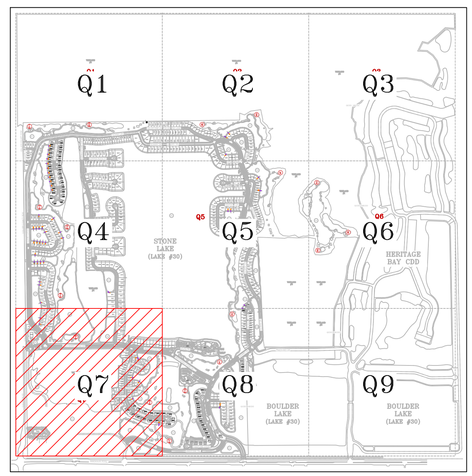

KEY MAP

REVISED OCTOBER 2023

cph
www.cphcorp.com
A Full Service A & E Firm
500 West Fulton Street
Sanford, FL 32771
Ph: 407.322.6841
Plans Prepared By: CPH, Inc.
State of Florida Licenses:
Engineer No. 3215
Surveyor No. LB7143
Architect. No. AA26000926
Landscape No. LC000298

No.	Date	Revision

Designed: A. LOPEZ
Drawn: A.LOPEZ
Checked: J. SATFIELD
Job No.: Q0501
Date: 12/02/21

© 2023

THE QUARRY JURISDICTION MAP

THE QUARRY CDD

NAPLES / COLLIER COUNTY / FLORIDA

THIS SHEET NOT VALID FOR CONSTRUCTION WITHOUT COMPLETE SET OF PLANS. SEE GENERAL NOTES FOR MASTER LEGEND.

Sheet No. Q7

\\cph\pz\Jobs\Q0504\Civil\DWG\Report_Figures_and_Exhibits\TQCDD – Jurisdiction Exhibit\8.30.2023\TQCDD – Jurisdiction Exhibit_Revised 2023 08.dwg, 10/30/2023 4:26:49 PM, Messonnier, Corey, _cph – Civil And Landscape.stb

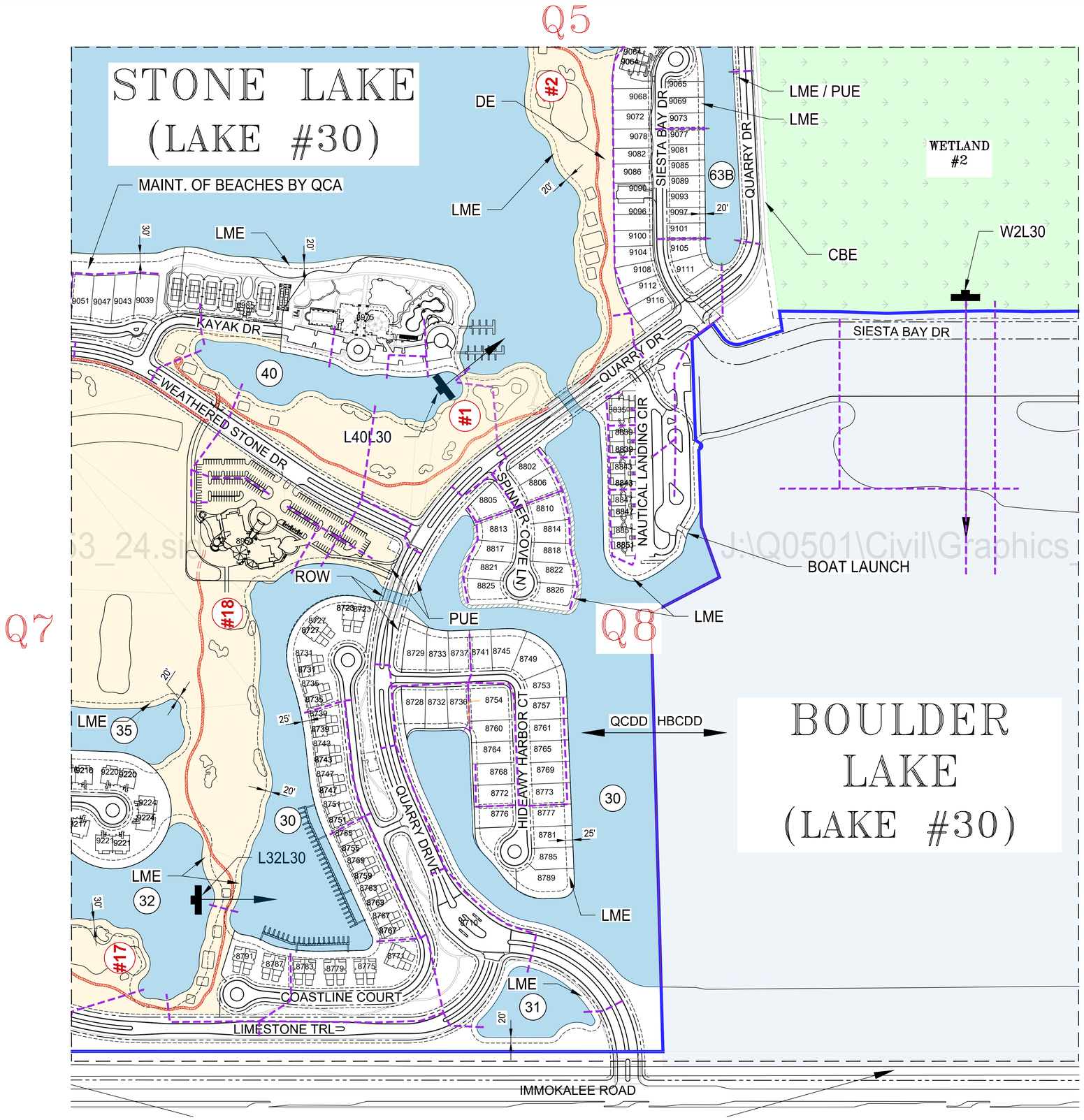

LEGEND

- QCA
- QUARRY GOLF CLUB
- QCDD PRESERVE
- QCDD LAKES
- HERITAGE BAY
- OTHERS
- CART PATH
- STORM STRUCTURE
- THE QUARRY LIMITS
- STORMWATER PIPES
- QCCD DOWN-SPOUT CONNECTION PIPE
- QCA DOWN-SPOUT CONNECTION PIPE
- WETLAND / PRESERVE LIMITS
- SEAWALL
- ## LAKE NUMBER
- #1 GOLF COURSE HOLE NUMBER
- (LME) LAKE MAINTENANCE EASEMENT
- (CBE) CONSERVATION BUFFER EASEMENT
- (PUE) PUBLIC UTILITY EASEMENT
- (DE) DRAINAGE EASEMENT
- (LSE) LANDSCAPE MAINTENANCE EASEMENT

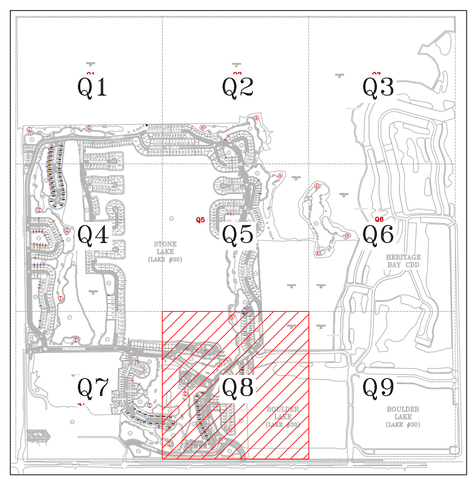

KEY MAP

REVISED OCTOBER 2023

cph
www.cphcorp.com
A Full Service
A & E Firm
500 West Fulton Street
Sanford, FL 32771
Ph: 407.322.6841
Plans Prepared By:
CPH ,Inc.
State of Florida Licenses:
Engineer No. 3215
Surveyor No. LB7143
Architect. No. AA26000926
Landscape No. LC000298

No.	Date	Revision

Designed: A. LOPEZ
Drawn: A.LOPEZ
Checked: J. SATFIELD
Job No.: Q0501
Date: 12/02/21

© 2023

THE QUARRY
JURISDICTION MAP

THE QUARRY CDD
NAPLES / COLLIER COUNTY / FLORIDA

THIS SHEET NOT VALID FOR CONSTRUCTION WITHOUT COMPLETE SET OF PLANS. SEE GENERAL NOTES FOR MASTER LEGEND.

Sheet No.
Q8

\\cph\pz\Jobs\Q0504\Civil\DWG\Report_Figures_and_Exhibits\TQCDD - Jurisdiction Exhibit\8.30.2023\TQCDD - Jurisdiction Exhibit_Revised 2023 08.dwg, 10/30/2023 4:27:00 PM, Messonnier, Corey, _cph - Civil And Landscape.stb

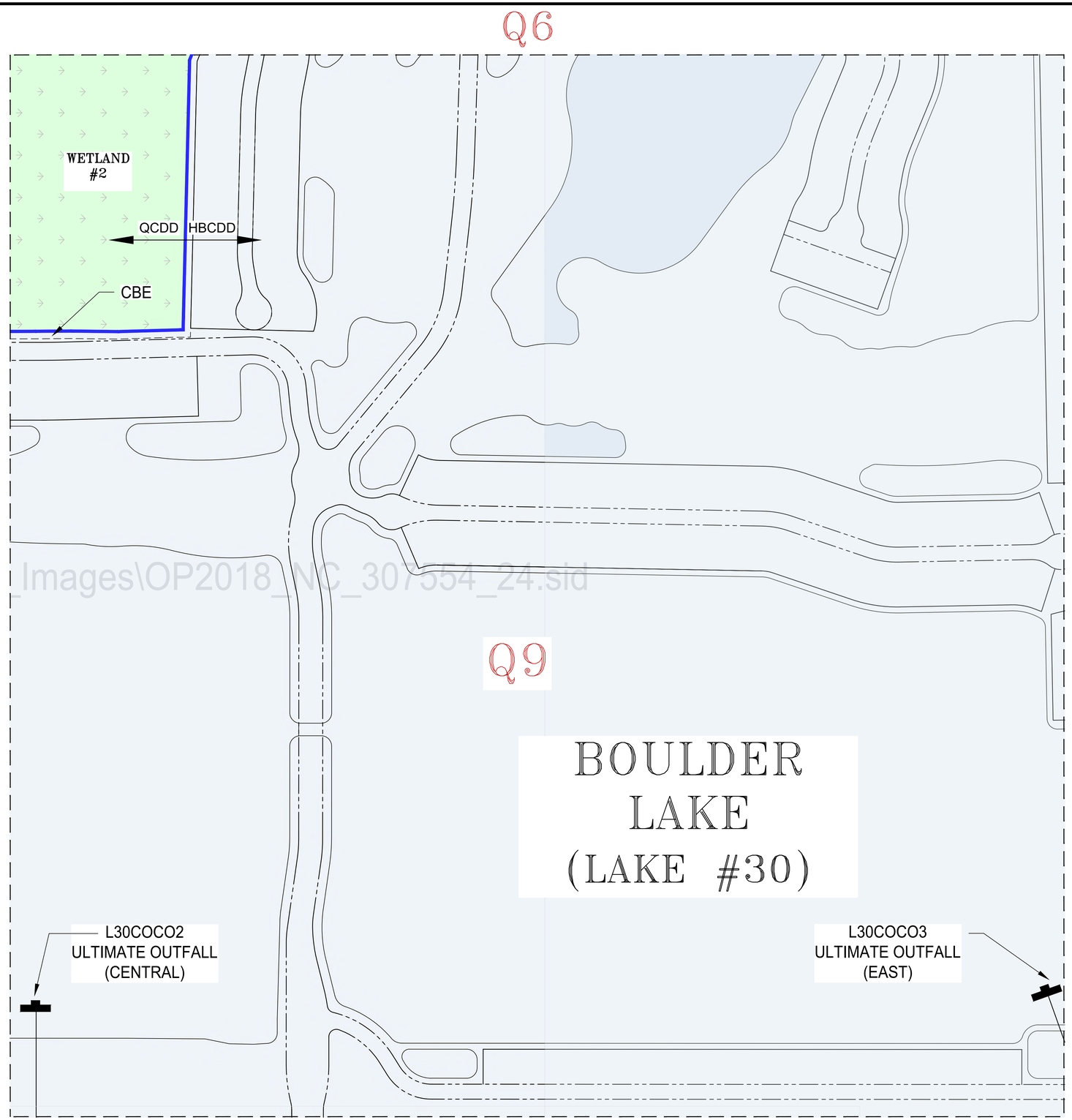

_Images\OP2018_NC_307554_24.sld

LEGEND

- QCA
- QUARRY GOLF CLUB
- QCDD PRESERVE
- QCDD LAKES
- HERITAGE BAY
- OTHERS
- CART PATH
- STORM STRUCTURE
- THE QUARRY LIMITS
- STORMWATER PIPES
- QCCD DOWN-SPOUT CONNECTION PIPE
- QCA DOWN-SPOUT CONNECTION PIPE
- WETLAND / PRESERVE LIMITS
- SEAWALL
- (##) LAKE NUMBER
- (#1) GOLF COURSE HOLE NUMBER
- (LME) LAKE MAINTENANCE EASEMENT
- (CBE) CONSERVATION BUFFER EASEMENT
- (PUE) PUBLIC UTILITY EASEMENT
- (DE) DRAINAGE EASEMENT
- (LSE) LANDSCAPE MAINTENANCE EASEMENT

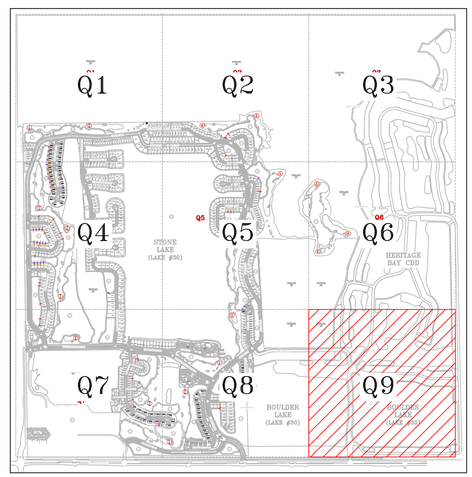

KEY MAP

REVISED OCTOBER 2023

N

CDD

cph
www.cphcorp.com
A Full Service
A & E Firm
500 West Fulton Street
Sanford, FL 32771
Ph: 407.322.6841
Plans Prepared By:
CPH, Inc.
State of Florida Licenses:
Engineer No. 3215
Surveyor No. LB7143
Architect. No. AA26000926
Landscape No. LC000298

No.	Date	Revision
1		
2		
3		
4		
5		
6		
7		

Designed: A. LOPEZ
Drawn: A.LOPEZ
Checked: J. SATFIELD
Job No.: Q0501
Date: 12/02/21

© 2023

THE QUARRY
JURISDICTION MAP

THE QUARRY CDD

NAPLES / COLLIER COUNTY / FLORIDA

THIS SHEET NOT VALID FOR CONSTRUCTION WITHOUT COMPLETE SET OF PLANS. SEE GENERAL NOTES FOR MASTER LEGEND.

Sheet No.
Q9

\\cph\pz\Jobs\Q0504\Civil\DWG\Report_Figures_and_Exhibits\TQCDD – Jurisdiction Exhibit\8.30.2023\TQCDD – Jurisdiction Exhibit_Revised 2023 08.dwg, 10/30/2023 4:27:10 PM, Messonnier, Corey, _cph – Civil And Landscape.stb